USER MANUAL
NUPOWER XTENDER DUAL LS-20-S01-D30
BIDIRECTIONAL L- & S-BAND AMPLIFIER

PART NUMBER:

NW-BA-DUAL-LS-20-S01-D30

NuWaves RF Solutions
132 Edison Drive
Middletown, Ohio 45044
PH: 513-360-0800
FAX: 513-539-8782
www.nuwaves.com

1 NUPOWER XTENDER™ PRODUCT LINE OVERVIEW

The NuPower Xtender™ family of solid-state bidirectional RF amplifier modules, or "T/R modules," is designed to meet the demanding needs of the Aerospace & Defense, Industrial, and Commercial markets. Based on the latest Gallium Nitride (GaN) technology, NuPower Xtender's power efficiency and miniature form factor make it ideal for size, weight, and power-constrained broadband RF telemetry and tactical communications systems.

1.1 NUPOWER XTENDER™ PRODUCT LINE HIGHLIGHTS

- High Performance: Unique combination of broadband coverage, miniature form factors, and high efficiency.

- Enclosures: The NuPower Xtender™ family of bidirectional amplifiers is housed in an aluminum enclosure with mounting holes incorporated into the chassis.

- Completely Characterized: The NuPower Xtender™ family of solid-state bidirectional amplifiers have been completely characterized over temperature, voltage, and frequency. These high-performance modules offer significant value for the OEM user or the Systems Integrator.

- User Friendly: Reverse-voltage and over-voltage protection and regulator thermal shutdown provide defenses against user interface issues.

- High Reliability: NuWaves' selection of conservatively rated components provides high reliability. Each NuPower is inspected to IPC-A-610 Class II quality standards. NuWaves' Quality Management System is AS9100:2016 Rev D and ISO 9001:2015 certified.

- Applications: Unmanned Aircraft Systems (UAS) • Unmanned Ground Vehicles (UGV) • Unmanned Surface Vehicles (USV) • Broadband RF Telemetry • RF Communication Systems • Software Defined Radios • Test Labs

- Available Options:

    - Fan-cooled heat sink with 120V AC/DC wall plug adapter
    - Labeled interface cable with banana jack plugs

2 NUPOWER XTENDER DUAL LS-20-S01-D30 OVERVIEW

The NuPower Xtender™ DUAL LS-20-S01-D30 Bidirectional L- & S-Band Amplifier module is a small, lightweight, and power-efficient dual channel bidirectional amplifier (BDA), ideal for extending the communication range of half-duplex L- or S-band transceivers running constant-envelope or near-constant-envelope waveforms. The bidirectional amplifier typically generates 25W of RF transmit power from 1000 to 2500 MHz in transmit mode and the integrated low-noise amplifier provides a minimum of 12 dB of gain in receive mode.

Based on the latest Gallium Nitride (GaN) technology, NuPower's high-efficiency and 9 in.^{3} form factor make it ideal for SWaP-constrained applications. In addition, NuPower's broadband frequency coverage supports operational flexibility.

NuPower Xtender™ bidirectional amplifiers are designed with ruggedized chassis for high reliability in harsh environments.

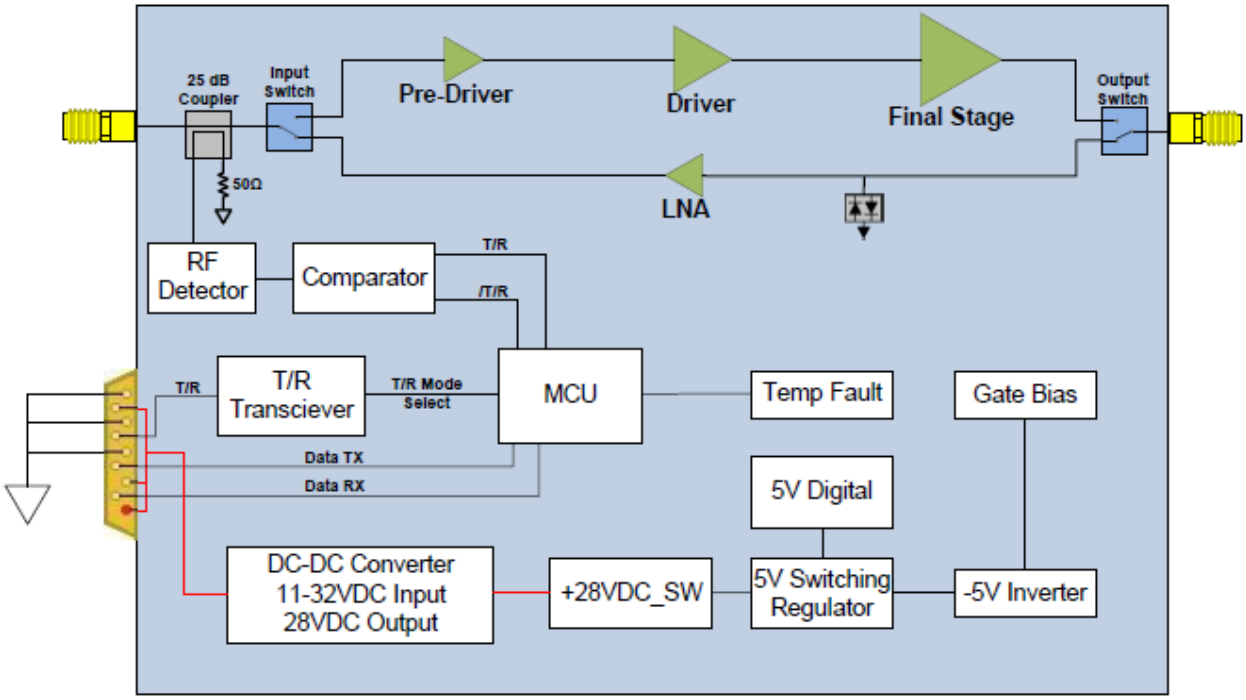

Note: Placement of connectors and circuit elements are for illustrative purposes only.

Figure 1: NuPower Xtender LS-DUAL-20-S01-D30 Functional Diagram (single channel only)

2.1 SPECIFICATIONS

The subsequent tables in this section outline the NuPower Xtender DUAL LS-20-S01-D30's performance specifications.

Table 1: NuPower Xtender LS10S1 Electrical Specifications

Parameter	Specification
Frequency Range	1000 to 2500 MHz
RF Output Power	10 Watts (min), 25 Watts (typ)
Transmit RF Gain	14 dB (typ)
Nominal Input Drive Level	+30 dBm
Maximum Input Drive Level	+33 dBm
Receive RF Gain	14dB (typ) / 12 dB (min)
Receive Noise Figure	2.0 dB (typ)
T/R Mode	Automatic Sensing (default) or Manual T/R Line (user-configurable option)
T/R Switch Time	0.95µs (typ) / 1.5µs (max) [RX-TX (Sink Mode)] 1.3µs (typ) / 1.5µs (max) [TX-RX (Sink Mode)] 1.3µs (typ) / 1.5µs (max) [RX-TX (Source Mode)] 1.6µs (typ) / 2.0µs (max) [TX-RX (Source Mode)]
Supply Voltage	+11 to +32 VDC
Transmit Current Consumption	2.5 A @ +28 VDC (typ) 3.5 A @ +28 VDC (max)
Receive Current Consumption	75 mA @ +28 VDC (typ)

Table 2: NuPower Xtender DUAL LS-20-S01-D30 Environmental Specifications

Operating Conditions	Specification
Operating Temperature (100% transmit duty cycle)	-40 to +85 °C (baseplate)
Storage Temperature	-55 to +85 °C

2.1.1 MECHANICAL SPECIFICATIONS

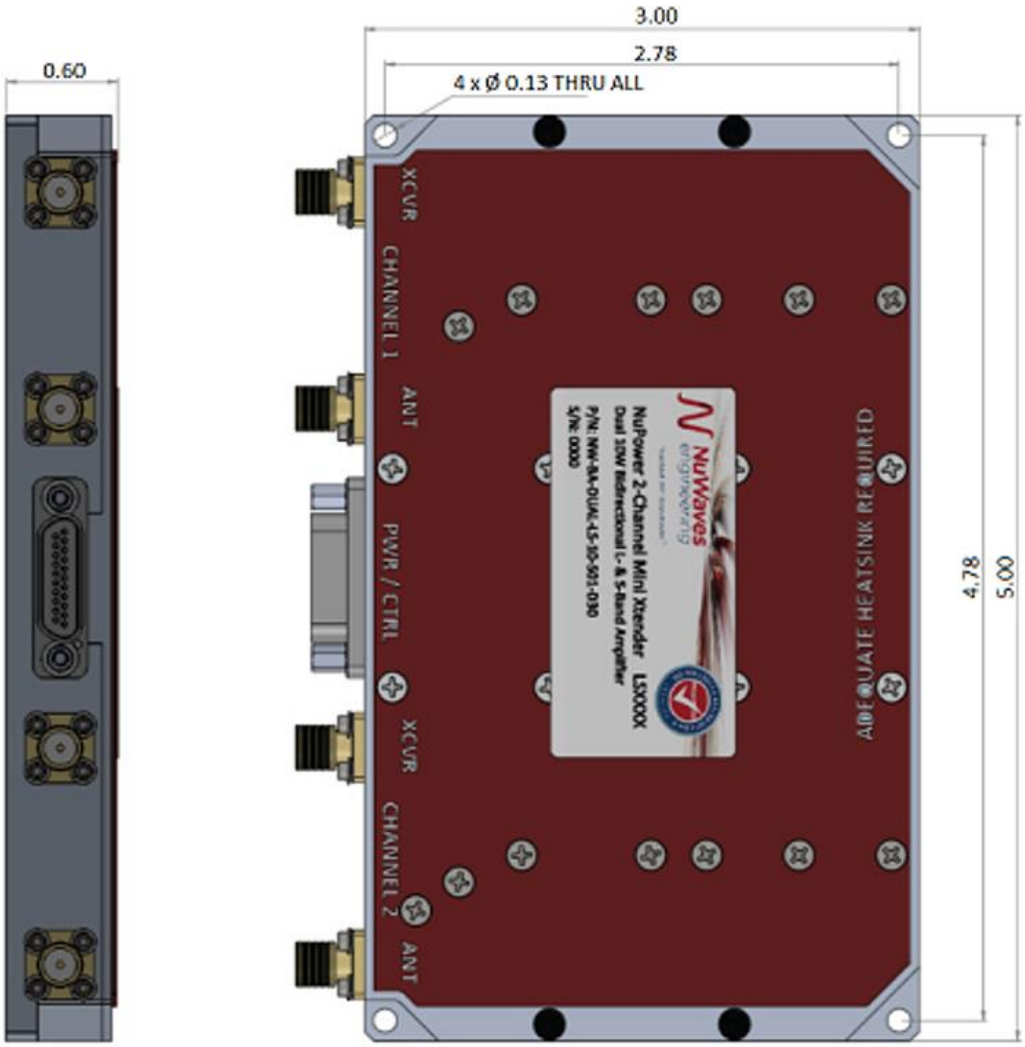

Figure 2: NuPower Xtender DUAL LS-20-S01-D30 Mechanical Outline

Table 3: NuPower Xtender DUAL LS-20-S01-D30 Mechanical Specifications

Parameter	Specification
RF Connectors	SMA (female)
Control / Power Interface Connector	21 Pin Micro-D (socket)
Dimensions (L x W x H)	3.0” x 5.0” x 0.6”
Weight	9.25 oz. (typ)

2.2 HEAT SINKING

The NuPower Xtender is offered as a stand-alone module, or included with optional accessories, which also includes a fan-cooled heat sink with an AC/DC adapter and an interface cable with banana jack plug terminations. The fan-cooled heat sink provides sufficient cooling for operating the NuPower Xtender at room temperature (25°C); however, higher ambient temperatures may require additional heatsinking to maintain a baseplate temperature below 85 °C at 100% transmit duty cycle.

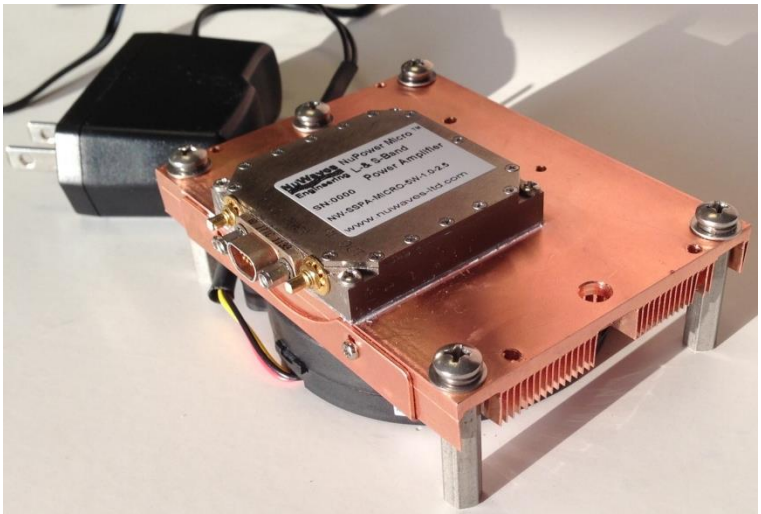

Figure 3: The NuPower PA Kit offers "out-of-the-box" operation for the user. The fan-cooled heatsink with an AC/DC adapter is shown with an example PA (NuPower Xtender <u>not</u> shown).

Caution: The use of external heatsinking is required especially for those applications requiring high duty cycle operation (e.g. continuous wave) or for extended on-time testing. Operation without a proper heat sink under these conditions will cause permanent damage to the product and will void the product warranty.

3 SETUP AND OPERATION

This section provides specific details for proper operation of the NuPower Xtender DUAL LS-20-S01-D30 module. Following these guidelines will prevent damage to the bidirectional amplifier or external equipment.

3.1 POWER SUPPLY REQUIREMENTS

To operate the NuPower Xtender DUAL LS-20-S01-D30, ensure that the power supply has adequate overhead to source the current demand of the RF amplifier. The power supply source must provide a voltage of +11 to +32 VDC with minimum 7 amps capability.

3.2 CONNECTING A PROPER LOAD TO THE ANTENNA TERMINAL

To prevent damage to the amplifier module, the antenna terminal must be terminated into a 50 Ω load. Examples of a proper load include:

- Directly connecting to an antenna specified for the frequency range (1.0 to 2.5 GHz). Connecting to an inappropriate antenna may result in damage to the amplifier module.
- Connecting to a proper antenna through a 50 Ω transmission line or coaxial cable. Avoid using damaged cables or corroded connectors while attaching the unit to an antenna.
- Terminating the antenna terminal into a 50 Ω power attenuator with minimum 20 dB attenuation.
- Connecting to a 50 Ω load capable of dissipating the RF power from the amplifier module. Loads capable of handling 30 Watts per channel (min) are recommended.

3.3 POWERING-UP THE NUPOWER XTENDER DUAL LS-20-S01-D30

The NuPower Xtender DUAL LS-20-S01-D30 must be terminated into a proper load before power is applied. Refer to Section 3.2 for the specifications of the proper load. After the amplifier is properly terminated, the interface cable can be connected to the unit and power can be applied. The amplifier is now ready for operation.

4 HARDWARE INTERFACE

- The transceiver interface connector, “XCVR,” is SMA (female).
- The antenna connector, “ANT,” is SMA (female).
- The pin-out definitions for the 21 pin Micro-D socket connector, “CTRL/PWR,” are provided in Table 4. In a typical installation, the amplifier module is mated to a host controller board via a cable harness.

The ANT SMA connector is the antenna connection. This connection should always be loaded into 50 Ω, otherwise the amplifier could be damaged.

4.1 INTERFACE CONNECTOR

The NuPower Xtender features a 9 pin Micro-D interface connector for control, power, and ground connections.

Table 4: NuPower Xtender Interface Pin-Out Definitions

Socket No.	Name	I/0	Description
Channel 1: 10, 11, 20, & 21	DC Power	I	DC Power (+11 to +32 VDC)
Channel 2: 1, 2, 12, 13			
Channel 1: 8, 9, 18, 19	GND	I	DC Return
Channel 2: 3, 4, 14, 15			
Channel 1: 7	RS-485 Data +	O	RS-485 Data Transmit
Channel 2: 5			
Channel 1: 17	RS-485 Data -	I	RS-485 Data Receive
Channel 2: 16			
6 (Both Channels)	T/R Enable	I/O	Transmit/Receive (T/R) Source or Sink

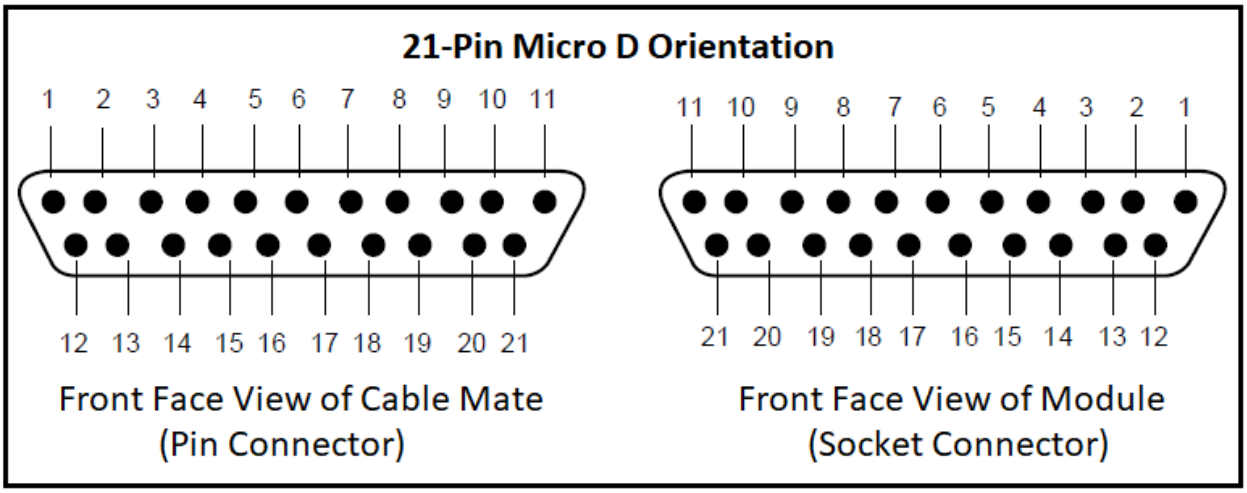

Figure 4: 21-Pin Micro-D Socket Locations

The optional interface cable harness is comprised of 21 wires, includes a Micro-D connector with pins, and mates directly to the NuPower Xtender DUAL LS-20-S01-D30 interface connector.

4.2 DC POWER

The nominal supply voltage for the NuPower Xtender DUAL LS-20-S01-D30 is +28 VDC. The amplifier module supports operation over a supply voltage range of +11 to +32 VDC with minimal performance degradation.

4.3 GROUND

The signal and power grounds are tied together in the amplifier module.

4.4 RS-485 SERIAL COMMUNICATIONS

These signals are for the RS-485 serial communications with the NuPower Xtender DUAL LS-20-S01-D30. This interface is described in Section 5.

4.5 TRANSMIT/RECEIVE (T/R) SOURCE OR SINK

The T/R Source or Sink line is configurable as either an output (source) or an input (sink). When the T/R line is configured in source mode, the Xtender transmit and receive switching occurs automatically, based on the T/R level setting and the transceiver's transmit state. The Xtender sources a logic signal to indicate the mode (transmit or receive) of the BDA. A logic *high* indicates the Xtender is in transmit mode, while a logic *low* indicates the Xtender is in receive mode.

When the T/R line is configured in sink mode, the transmit and receive switching is under manual control. Applying a logic *high* to the T/R line places the Xtender in transmit mode. Likewise, applying a logic *low* to the T/R line places the Xtender in receive mode.

T/R line levels can be configured to +3.3 VDC or +5 VDC logic levels.

This I/O line is described in Section 5.

5 SERIAL INTERFACE

The NuPower Xtender DUAL LS-20-S01-D30 is designed to communicate with an RS-485 serial interface for adjusting linearization parameters via a serial terminal program, such as *Terminal*.

The serial port must be configured with the following attributes:

- Baud rate: 9600 bps
- Data bits: 8
- Stop bits: 1
- Parity: None

This section provides the user with the command syntax necessary to properly configure the bidirectional amplifier module for use. All commands have the following attributes:

- Command processing is *not* case sensitive.
- Spaces are always allowed and always ignored.
- After receiving and processing a command, the NuPower Xtender sends a Carriage Return terminated string as a notification that the command was completed.

5.1 SERIAL COMMANDS

Serial commands are outlined in the table below.

Table 5: NuPower Xtender DUAL LS-20-S01-D30 Serial Commands

Command	Function	ICD Section
CONSTO	Store settings to EEPROM	5.1.1
TRLVL*xxxx*	Set Transmit Threshold Control value	5.1.2
TRMODE*x*	Set T/R Mode	5.1.3
TRVOLT*x*	Set T/R Voltage	5.1.3
STAT?	Display Status	5.1.4

5.1.1 Configuration Storage

The “CONSTO” command is used to store current settings to the EEPROM. If a value is changed and the CONSTO command is not entered, the Xtender will return to the last stored setting upon unit power cycling, and the changes will be lost.

5.1.2 Transmit Threshold Control

The Transmit Threshold Control feature enables the user to change the signal level threshold at which the Xtender automatically switches from its default receive state to transmit state. Other values and their corresponding thresholds can be found in Table 6 below:

Table 6: NuPower Xtender DUAL LS-20-S01-D30 Transmit Threshold

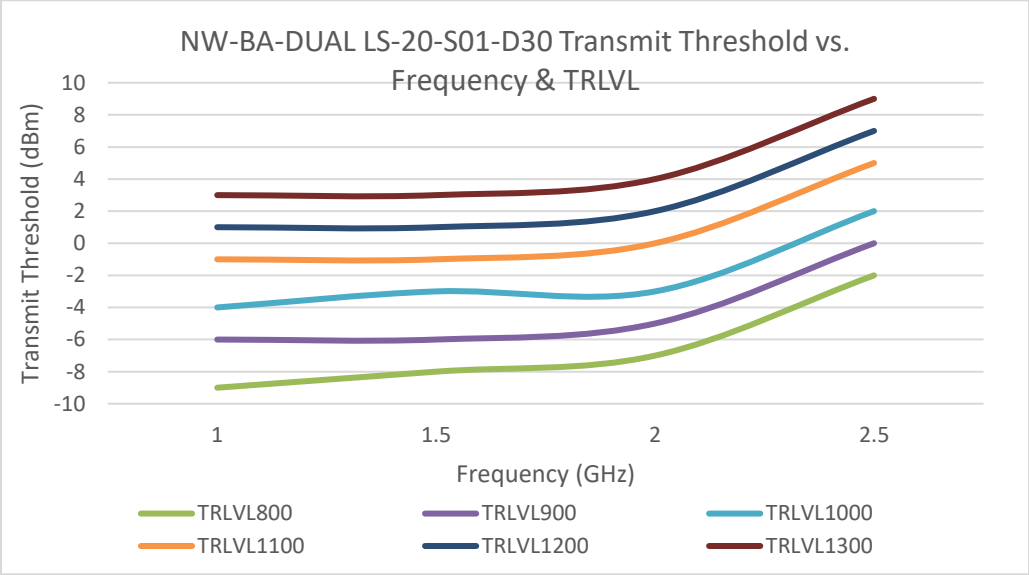

Note: If the Xtender is exhibiting false transmit switch triggering, it is recommended to set a higher transmit threshold control value. This may occur when setting TRLVL at 700 or below and is not recommended to set below 800.

The "STAT?" command can be used to display the current Transmit Threshold Control value.

The "TRLVL*xxxx*" command is used to change the setting of the Transmit Threshold Control value.

The Transmit Threshold Control settings are defined as:

- 0000 = lowest Transmit Threshold Control value, lowest transmit detection sensitivity.
- 4095 = highest Transmit Threshold Control value, greatest transmit detection sensitivity.
- A Transmit Threshold Control value of 0900 sets the threshold to approximately 0 dBm at the highest point.
- *Note: Factory default setting is 0900 (~0 dBm threshold).*

5.1.3 T/R Source or Sink

The "TRMODE*x*" command is used to configure the mode of the T/R Source or Sink I/O line, where "*x*" is either 0 or 1.

The T/R Source or Sink settings are defined as:

- 0 = Source Mode. In Source Mode, the T/R Source or Sink line functions as an output. While in Source Mode, an auto-sense circuit controls the T/R switching. When the Xtender is in transmit mode, a logic *high* signal will be output on this line. Conversely, when the Xtender is in receive

mode, a logic *low* signal will be output on this line.

- 1 = Sink Mode. In Sink Mode, the T/R Source or Sink line functions as an input, and the T/R switching is controlled by applying a logic *high* or logic *low* to this line. Applying a logic *high* signal to this line enables transmit mode, while applying a logic *low* enables receive mode.
- *Note: Factory default setting is 0 (Source Mode)*

The "TRVOLT*x*" command is used to configure the input and output logic levels, where "*x*" is either 0 or 1. The T/R Logic Level settings are defined as:

- 0 = 3.3 VDC Logic
- 1 = 5 VDC Logic
- *Note: Factory default setting is 0 (3.3 VDC Logic).*

5.1.4 Unit Status Command

The "STAT?" command is used to display the system status. Information displayed in the system status is defined as:

- Model and Firmware Version
- Serial Number
- Transmit Threshold Control Value
- T/R Source or Sink Mode Value and Logic Level

6 PRODUCT DISPOSAL – END-OF-LIFE

Safety is a guiding principle of NuWaves RF Solutions. We ensure safe production and operation of our products, as well as end-of-life disposal. Improper disposal can adversely affect the environment, wildlife and human health. Please follow these guidelines when disposing of a NuWaves product:

- Do not remove the cover or any hardware
- Do not remove components from the circuit card assembly
- Do not incinerate
- Do not crush or shred
- Do not dispose of as unsorted municipal waste
- Do not export e-waste outside of the original destination country for recycling
- Utilize an e-Steward or ISO14001 certified e-waste recycler
- Consider export controls during recycler selection
- If a NuWaves product is incorporated into a larger system or sub-system, ensure that these guidelines are followed at system end-of-life

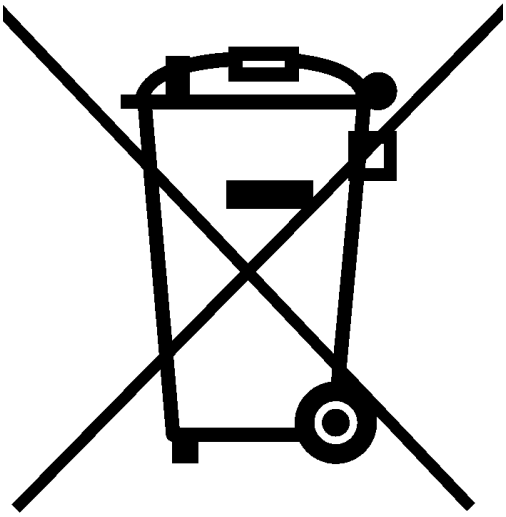

7 GETTING HELP - APPLICATIONS ENGINEERING

NuWaves RF Solutions offers technical support for basic configuration help and troubleshooting, Monday through Friday, 8 a.m. to 5 p.m. Eastern Time.

Technical Assistance, Application Engineering, and Sales:

Phone: (513) 360-0800
Email: sales@nuwaves.com

NuWaves Home Page:
https://www.nuwaves.com/

Product Warranty:
https://nuwaves.com/rf-and-microwave-product-solutions/support/

7.1 GENERAL INFORMATION

Copyright © 2006 – 2025 NuWaves Ltd. All rights reserved. The information contained in this user manual is copyright protected. NuWaves reserves the right to make periodic modifications and product improvements to the NuPower product line and the associated documentation.