# USER MANUAL
# NUPOWER™ 12B01A-10
# S-BAND POWER AMPLIFIER

## PART NUMBER:
## NW-PA-12B01A-10
## NW-PA-12B01A-10-D30

NuWaves RF Solutions




NuWaves RF Solutions
132 Edison Drive
Middletown, Ohio 45044
PH: 513-360-0800
www.nuwaves.com
sales@nuwaves.com

# 1 NUPOWER™ PRODUCT LINE OVERVIEW

The NuPower family of solid state RF power amplifier (PA) modules is designed to meet the demanding needs of the Aerospace & Defense, Industrial, and Commercial markets. Based on the latest gallium nitride (GaN) technology, NuPower's power efficiency and miniature form factor make it ideal for size, weight, and power-constrained broadband RF telemetry and tactical communications systems.

## 1.1 NUPOWER™ PRODUCT LINE HIGHLIGHTS

- High Performance: Unique combination of broadband coverage, miniature form factors, and high efficiency.

- Enclosures: The NuPower family of power amplifiers is housed in a silver nickel plated aluminum enclosure with mounting holes incorporated into the chassis.

- Completely Characterized: The NuPower family of solid state power amplifiers has been completely characterized over temperature, voltage, and frequency. These high-performance modules offer significant value for the OEM user or the Systems Integrator.

- User Friendly: Reverse-Voltage & Over-Voltage protection and regulator thermal shutdown provide defenses against user interface issues.

- High Reliability: NuWaves' selection of conservatively rated components provides high reliability. Each NuPower is inspected to IPC-A-610 Class II quality standards. NuWaves' Quality Management System is AS9100:2016 Rev D and ISO 9001:2015 certified.

- Applications: Unmanned Aircraft Systems (UAS) • Unmanned Ground Vehicles (UGV) • Unmanned Surface Vehicles (USV) • Broadband RF Telemetry • RF Communication Systems • Software Defined Radios • Test Labs

- Available Options:

    - Fan-cooled heat sink with AC/DC adapter
    - Labeled interface cable with banana jack plugs
    - 1 Watt input drive level

# 2 NUPOWER™ 12B01A-10 OVERVIEW

The NuPower™ 12B01A10 solid state power amplifier (SSPA) is a small, highly efficient PA that provides over 10 watts of RF power across the S-band frequencies of 2.2-2.395 GHz.

Based on the latest GaN technology, NuPower's greater than 40% power efficiency and 3.9 cubic inch form factor makes it ideal for size, weight, and power-constrained broadband RF telemetry and tactical communications systems.

The NuPower 12B01A-10 accepts a nominal 0 dBm RF input and provides over 40 dB of gain from 2200 to 2395 MHz. NuPower PAs feature over-voltage and reverse-voltage protection in addition to a simple control line interface allowing the user to easily place the module into transmit or standby mode of operation. A kit is available for purchase which includes a fan-cooled heatsink with AC / DC power adapter, and upgraded interface cable with labeled banana plugs.

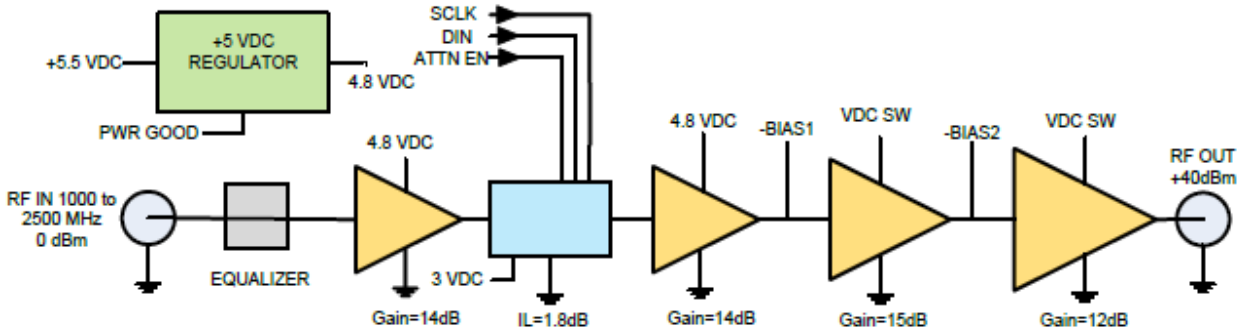


**Figure 1: NuPower 12B01A-10 Functional Diagram**

## 2.1 NUPOWER 12B01A-10 SPECIFICATIONS

The subsequent tables in this section outline the NuPower 12B01A-10's performance specifications.

**Table 1: NuPower 12B01A-10 Electrical Specifications**

| Parameter | Specification |
|---|---|
| Frequency Range | 2.2 GHz to 2.395 GHz |
| RF Output Power | 10 Watts (min) |
| RF Gain | 40 dB (min) |
| 2nd Harmonic | |
| 1000 to 1400 MHz | ≤ -6 dBc |
| 1400 1700 MHz | ≤ -15 dBc |
| 1700 to 2000 MHz | ≤ -20 dBc |
| 2000 to 2500 MHz | ≤ -25 dBc |

| Parameter | Specification |
|---|---|
| Supply Voltage | +11 to +32 VDC |
| Current Consumption | 1.5 A @ +28 VDC (typ) |
| Power Amplifier Enable | GND On |
| Nominal Input Drive Level | 0 dBm |
| Maximum Input Drive Level (No damage) | +10 dBm |
| Impedance | 50 Ω |

**Table 2: NuPower 12B01A-10 Environmental Specifications**

| Operating Conditions | Specification |
|---|---|
| Operating Temperature for Continuous Operation (>5 minutes) | -30 to +55 °C (ambient)<br>-30 to +60 °C (baseplate) |
| Operating Temperature for 20% Duty Cycle | -30 to +60 °C (ambient)<br>-30 to +65 °C (baseplate) |
| Storage Temperature | -40 to +85 °C |

**Table 3: NuPower 12B01A-10 Mean Time Between Failure (MTBF)**

| Conditions | Hours |
|---|---|
| Ground Benign (GB) | 126,690 |
| Airborne Inhabited Cargo (AIC) | 14,800 |
| Airborne Inhabited Fighter (AIF) | 10,650 |
| Airborne Uninhabited Cargo (AUC) | 8,400 |
| Airborne Uninhabited Fighter (AUF) | 5,800 |

## 2.2 NUPOWER 12B01A-10 MECHANICAL SPECIFICATIONS

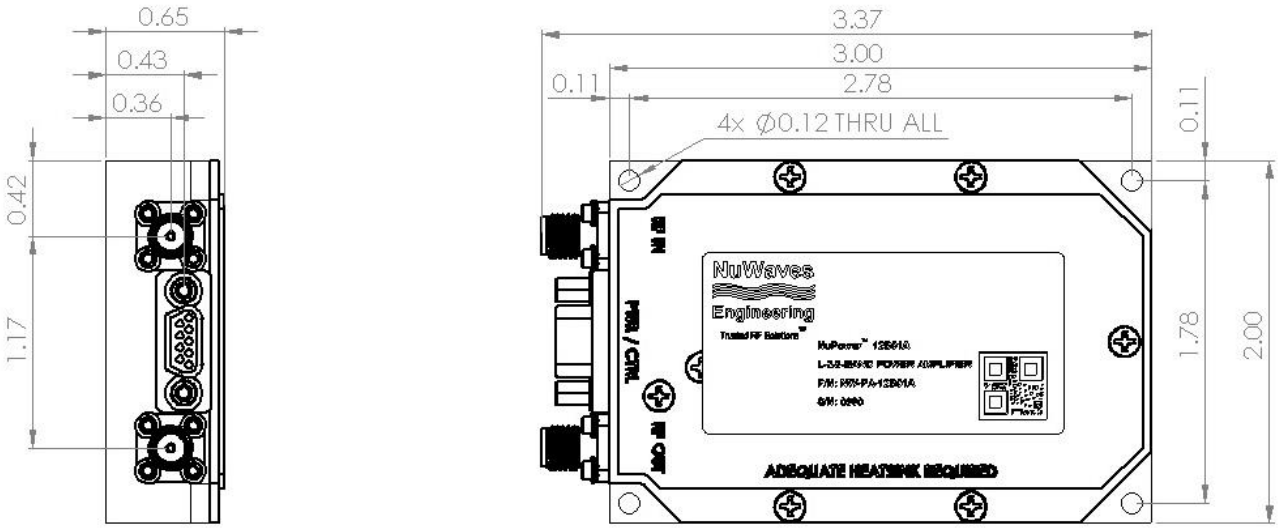


**Figure 2: NuPower 12B01A-10 Mechanical Outline**

**Table 4: NuPower 12B01A-10 Mechanical Specifications**

| Parameter | Specification |
|---|---|
| RF Connectors | SMA (female) |
| Control / Power Interface Connector | 9 Pin Micro-D (socket) |
| Dimensions (L x W x H) | 3.00” x 2.00” x 0.65” |
| Weight | 3.7 oz. |

## 2.3 HEAT SINKING

The NuPower 12B01A-10 is offered as a stand-alone module or with a kit, which also includes a fan-cooled heatsink with an AC / DC adapter, and an interface cable.

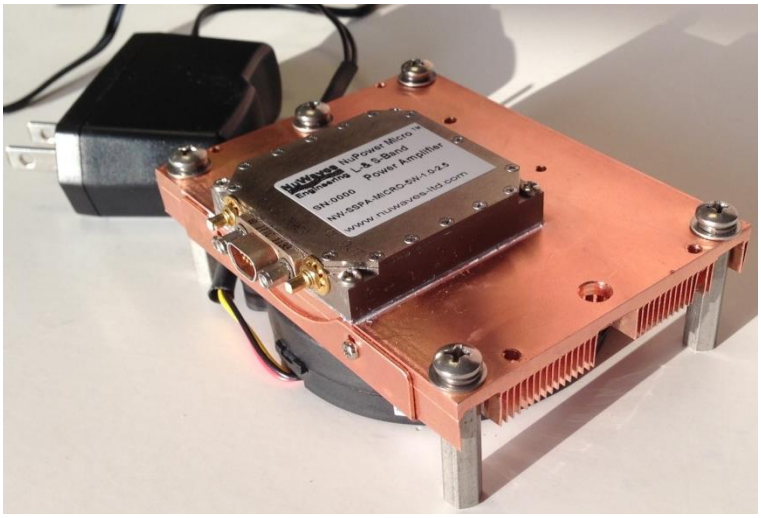

**Figure 3: The NuPower PA Kit offers "out-of-the-box" operation for the user. The fan-cooled heatsink with an AC/DC adapter is shown with an example PA (NuPower 12B01A-10 not shown).**




Caution: The use of external heat-sinking is required especially for those applications requiring high duty cycle operation (e.g. continuous wave) or for extended on-time testing. Operation without a proper heat sink under these conditions will cause permanent damage to the product and will void the product warranty.

The external heatsink thermal resistance requirements are:

- <0.25 ˚C/W for operation up to 60 ˚C ambient
- <0.7 ˚C/W for operation up to 40 ˚C ambient

# 3 SETUP AND OPERATION

This section provides specific details for proper operation of the NuPower 12B01A-10 module. Following these guidelines will prevent damage to the power amplifier or external equipment.

## 3.1 POWER SUPPLY REQUIREMENTS

To operate the NuPower 12B01A-10, ensure that the power supply has adequate overhead to source the current demand of the RF power amplifier. The power supply source must provide a typical voltage of +28 VDC with greater than 3 amps capability.

## 3.2 CONNECTING A PROPER LOAD TO THE ANTENNA TERMINAL

To prevent damage to the PA, the antenna terminal must be terminated into a 50 Ω load. Examples of a proper load include:

- Directly connecting to an antenna specified for the frequency range (225 MHz to 2400 MHz). Connecting to an inappropriate antenna may result in damage to the PA module.
- Connecting to a proper antenna through a 50 Ω transmission line or coaxial cable. Avoid using damaged cables or corroded connectors while attaching the unit to an antenna.
- Terminating the antenna terminal into a 50 Ω power attenuator with minimum 20 dB attenuation.
- Connecting to a load capable of dissipating the RF power from the PA module. Loads capable of handling 20 Watts (min) are recommended.

## 3.3 POWERING-UP THE 12B01A-10

The NuPower 12B01A-10 must be terminated to a proper load before power is applied. Refer to Section 3.2 for the specifications of the proper load. After the PA is properly terminated, the interface cable can be connected to the unit and power can be applied. The PA is now ready for operation.

## 3.4 TRANSMIT TURN-ON TIME




Caution: Do not apply transmit data until the PA module is at full power. This will prevent loss of data at the beginning of a message.

The NuPower 12B01A-10 is at full power approximately 500 µS after the RF Enable line goes low (ground). Therefore, transmit data can be applied to the input after 500 µS without loss of data.

# 4 HARDWARE INTERFACE

- The RF Input connector is SMA (female).
- The RF Output connector is SMA (female).
- The pin-out definitions for the 9 pin Micro-D socket connector are provided in Table 5. In a typical installation, the PA module is mated to a host controller board via a cable harness.




The RF Out SMA connector is the antenna connection. This connection should always be loaded into 50 Ω, otherwise the PA could be damaged.

## 4.1 INTERFACE CABLE HARNESS

The cable harness that connects the host controller to the 9 pin Micro-D connector of the NuPower 12B01A-10 is made up of 9 wires.

**Table 5: NuPower 12B01A-10 Interface Pin-Out Definitions**

| Pin No. | Pin Name | I/0 | Description |
|---|---|---|---|
| 1, 2 | V Supply | I | Primary Power (+11 to +32 VDC) |
| 3, 4 | GND | I | Signal and Power Ground |
| 5 | RF Enable | I | Transmit Control |
| 6, 7, 9 | N.C. | - | N/A |
| 8 | Temp Flag | 0 | Over-temp Indicator |

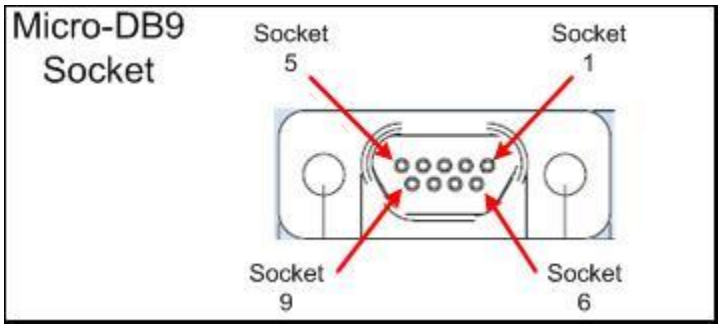


**Figure 4: Micro-D Socket Locations**

## 4.2 DC POWER

The nominal supply voltage for the NuPower 12B01A-10 is +28 VDC; however, the amplifier module is able to support operation over a supply voltage range of +11 to +32 VDC.

## 4.3 GROUND

The signal and power grounds are tied together in the PA module.

## 4.4 RF ENABLE

This signal is the logic control input that designates whether the unit is in transmit or standby mode. The RF Enable line is pulled high internally placing the PA module in *standby* mode. If the pin is left floating (i.e. not connected), the unit will default to *standby* mode.

Grounding the pin (i.e. a voltage below +0.2 VDC) places the unit in *transmit* mode. The user can either connect the RF Enable line to pins 3 & 4 on the CTRL/PWR interface connector, or an open drain logic line capable of sinking 500 μA to place the unit in *transmit* mode.

## 4.5 TEMP FLAG

This signal is a logic level output to indicate an over-temperature condition in the NuPower 12B01A-10. A logic high (+5 VDC) indicates normal operation, while a logic low (0 VDC) indicates an over-temperature condition. The NuPower 12B01A-10 incorporates internal logic circuitry that turns off the DC bias to the RF transistors.




Caution: The amplifier should be shut down and allowed to cool off when the over-temperature flag is set high to avoid damage to the module.

# 5 PRODUCT DISPOSAL – END-OF-LIFE

Safety is a guiding principle of NuWaves RF Solutions. We ensure safe production and operation of our products, as well as end-of-life disposal. Improper disposal can adversely affect the environment, wildlife and human health. Please follow these guidelines when disposing of a NuWaves product:

- Do not remove the cover or any hardware
- Do not remove components from the circuit card assembly
- Do not incinerate
- Do not crush or shred
- Do not dispose of as unsorted municipal waste
- Do not export e-waste outside of the original destination country for recycling
- Utilize an e-Steward or ISO14001 certified e-waste recycler
- Consider export controls during recycler selection
- If a NuWaves product is incorporated into a larger system or sub-system, ensure that these guidelines are followed at system end-of-life

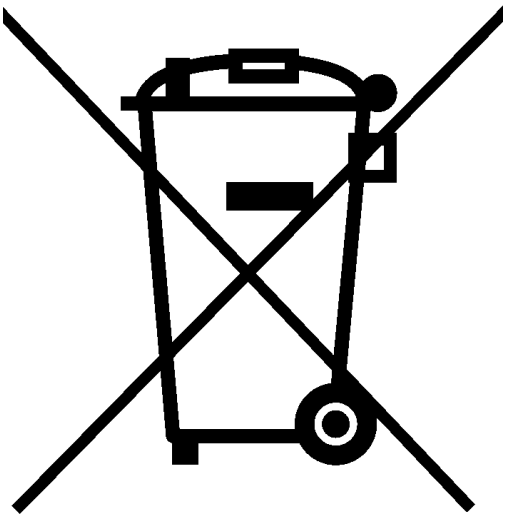

# 6 GETTING HELP - APPLICATIONS ENGINEERING

NuWaves RF Solutions offers technical support for basic configuration help and troubleshooting, Monday through Friday, 8 a.m. to 5 p.m. Eastern Time.

Technical Assistance, Application Engineering and Sales:

Email: sales@nuwaves.com

Phone: (513) 360-0800

NuWaves Home Page: https://www.nuwaves.com

Product Warranty:

https://nuwaves.com/wp-content/uploads/NuWaves_Warranty_Repair-1.pdf

## 6.1 GENERAL INFORMATION

Copyright © 2006 – 2019 NuWaves Ltd. All rights reserved. The information contained in this user manual is copyright protected. NuWaves reserves the right to make periodic modifications and product improvements to the NuPower product line and the associated documentation.